LUC@BJTU Weihai Campus

Fundamentals of Communication Systems (CNSCC160) Tutorial 1

Group Number:

Name:

1. Identify the key features of analogue signals.

模拟信号在时间和幅度上连续

An analogue signal is usually smooth and continuous. **Analogue signals are continuous in time and amplitude.** Analogue signals can be classified as simple or composite. An example of a simple analogue signal is a sine wave. The sine wave is the most fundamental form of a periodic analogue signal.

例如正弦波

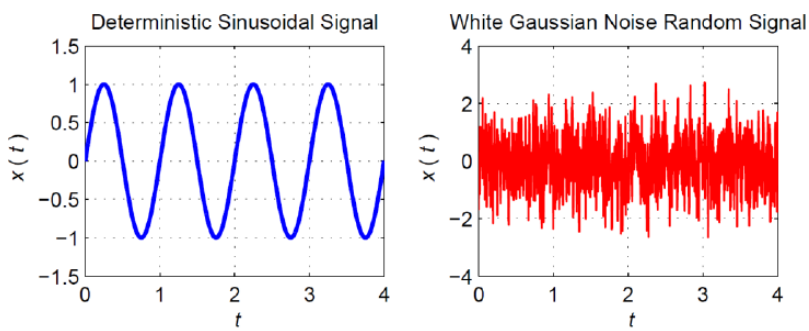

What about digital signal? **Digital signals are continuous in time but discrete in amplitude.** Two digital signals are shown below: one with two signal levels and the other with four signal levels.

数字信号时间上连续，幅度上不连续

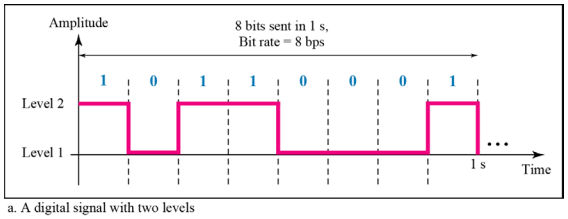

a. A digital signal with two levels

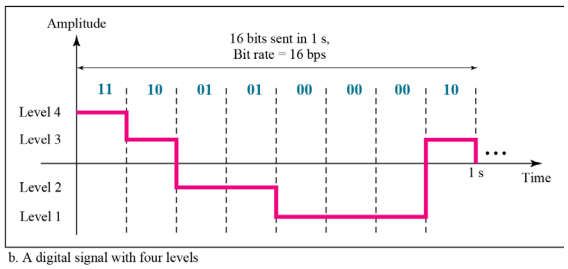

b. A digital signal with four levels

2. What is the relationship between period and frequency? Give three numerical examples with your explanation.

$T = \frac{1}{f}$

The inverse of period is frequency. Period is normally measured in second. Frequency is usually measured in Hz. Examples:

For a period of T = 1s, the frequency is 1 Hz.

For a period of T = 0.5s, the frequency is 2 Hz.
For a period of T = 1ms, the frequency is 1000 Hz.

3. What is the Morse code for Lancaster? Try to write Morse code for your name.

Morse code represents English letters by a sequence of dots and dashes.
The morse code for Lancaster is given below:

周期无限,频率为0
直流信号

```
.-.. .- -. -.-. .- ... - . .-.
```

4. What if a signal maintains a constant amplitude for the entire active time? In such a case, what is the frequency?

The **period** refers to the amount of time a signal needs to complete one cycle after which the signal simply repeats itself again and again。

Frequency refers to **the number of periods in one second**. Frequency is the inverse of period. If a signal does not change at all (has a constant amplitude), it never completes a cycle, so its frequency is 0 Hz. This is a special case. We call it a DC signal.

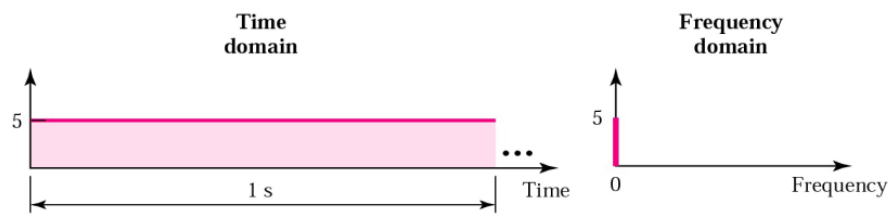

a. A signal with frequency 0

5. What if a signal changes instantaneously? What if it jumps from one level to another in no time? What is the frequency?

信号瞬间改变,周期为0,频率为无穷。

When a signal changes instantaneously, its period is zero; since frequency is the inverse of period, in this case, the frequency is 1/0, or infinite. In practice signals never change instantaneously and so infinity is never achieved.

6. A digital signal has a bit rate of 10bps, what is the duration of each bit (the bit interval)? Clue: 1000 ms = 1 second

Bit interval is **the time required to send one single bit**. Bit rate is **the number of bits sent in 1 second**.

10 bps = 1秒中传输10个bit.

Hence, the question basically is, the digital signal transmits 10 bits in one second, what is the time duration of one bit?
Bit interval = 1/10 s = 0.1 s = 100 ms.
The following figure clearly shows the relationship between bit interval and bit rate.

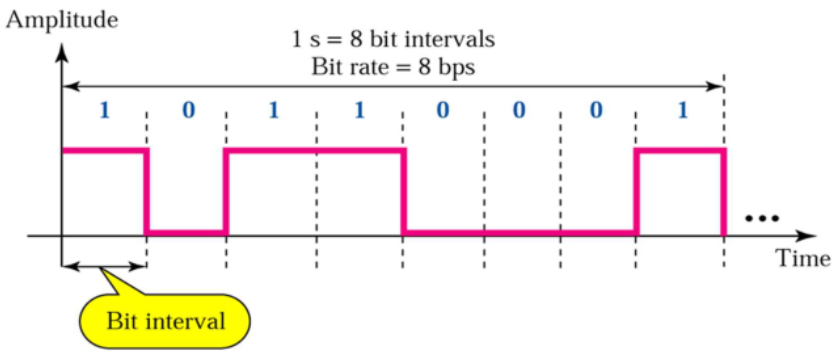
Amplitude
1 s = 8 bit intervals
Bit rate = 8 bps
1
0
1
1
0
0
0
1
Time
Bit interval